MODEL 1501

STANDARD FEATURES

- Fail-secure, faceplate size 5 7/8" x 1 1/4"
- Keeper depth - 5/8" maximum latch projection possible with 1/8" door/frame clearance - 3/4"
- Steel faceplate, suitable for wood frames
- Separate spacers, solenoid mounts to faceplate from front
- Limited warranty - 12 months

SPECIFICATION

TAMPER STRENGTH	1000 LB (454 KG)
VOLTAGE	1501-01 8-16 VAC/3-6 VDC 1501-05 12 VAC/VDC 1501-08 24 VAC/VDC
FINISH	US26D or US4
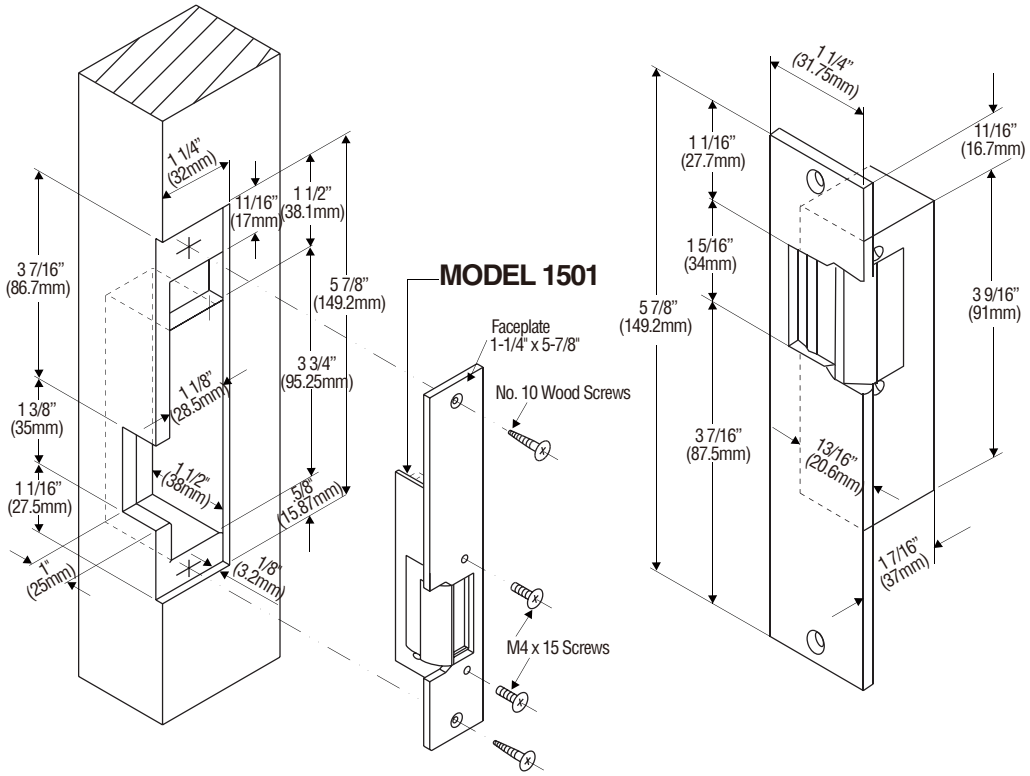
SPECIFICATION DETAILS